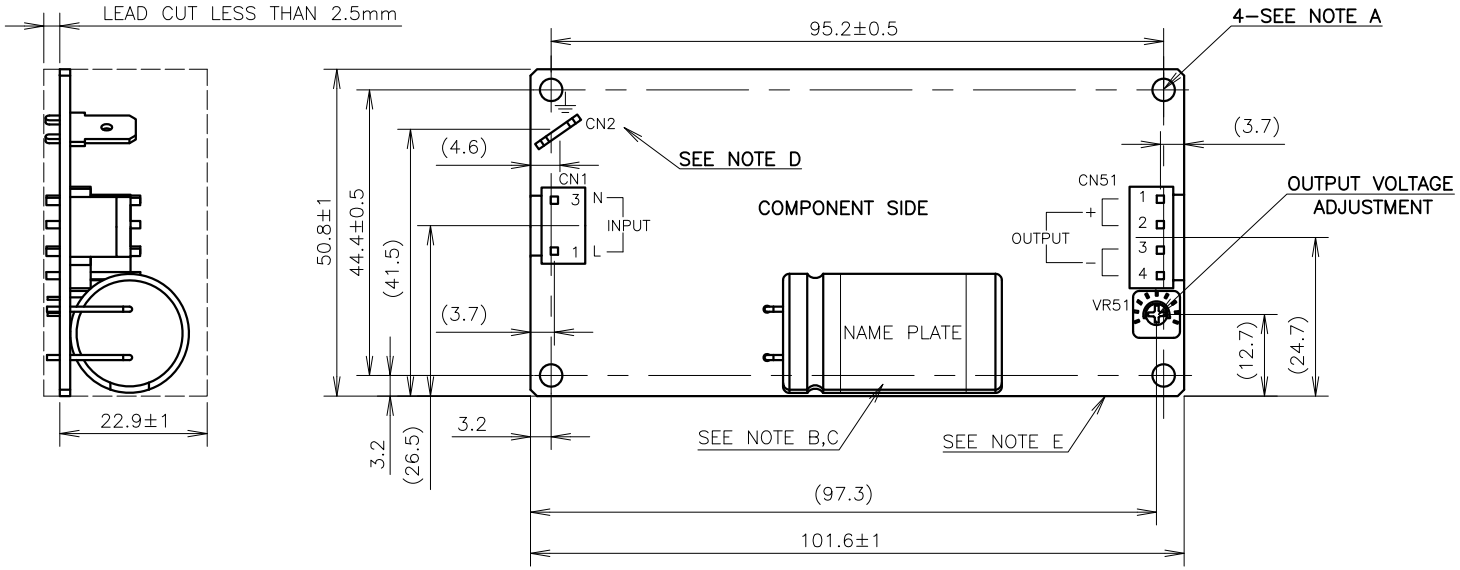

CONNECTORS USED:

PART DESCRIPTION	PART NAME	MANUFACT.	QTY
PIN HEADER (INPUT SIDE CN1)	B2P3-VH(LF)(SN)	J.S.T	1
PIN HEADER (OUTPUT SIDE CN51)	B4P-VH(LF)(SN)	J.S.T	1

MATCHING HOUSINGS, PINS & TOOL (NOT INCLUDED WITH THE PRODUCT):

PART DESCRIPTION	PART NAME	MANUFACT.	QTY
SOCKET HOUSING(CN1)	VAR-2/VHR-3N	J.S.T	1
SOCKET HOUSING(CN51)	VHR-4N	J.S.T	1
TERMINAL PINS	SVH-41T-P1.1	J.S.T	6
	BVH-41T-P1.1		
HAND CRIMPING TOOL	YC-930R	J.S.T	-
	YC-931R		
HOUSING (CN2)	22~18AWG: STO-21T-250N	J.S.T	1
	18~14AWG: STO-61T-250N		

NOTE:

A: 4-ø3.5 HOLES ARE FOR CUSTOMER'S CHASSIS MOUNTING HOLES.

B: MODEL NAME, INPUT VOLTAGE RANGE, NOMINAL OUTPUT VOLTAGE, MAXIMUM OUTPUT CURRENT AND SAFETY MARKING(FOR ONLY APPROVED PRODUCTS) ARE SHOWN HERE IN ACCORDANCE WITH THE SPECIFICATIONS.

C: COUNTRY OF MANUFACTURE WILL BE SHOWN HERE.

D: ⏚ CN2 IS FOR SAFETY GROUND CONNECTION.

E: TO KEEP THE DISTANCE MORE THAN 5mm BETWEEN PCB EDGE AND CUSTOMER'S CHASSIS.

(unit : mm)

MODEL NAME	CME100A
TDK-Lambda	

CA846-02-01B