C3216CH2W822J115AA

TDK Item Description : C3216CH2W822JT****

Lead Free | Halogen Free | REACH | RoHS COMPLIANT

Application & Main Feature

Commercial Grade (Mid Voltage (100 to 630V))

Series

C3216 [EIA 1206]

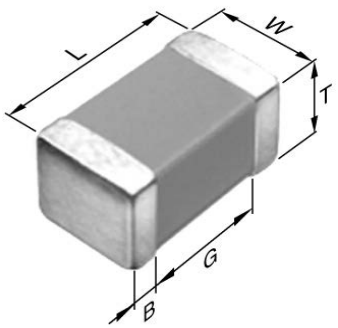

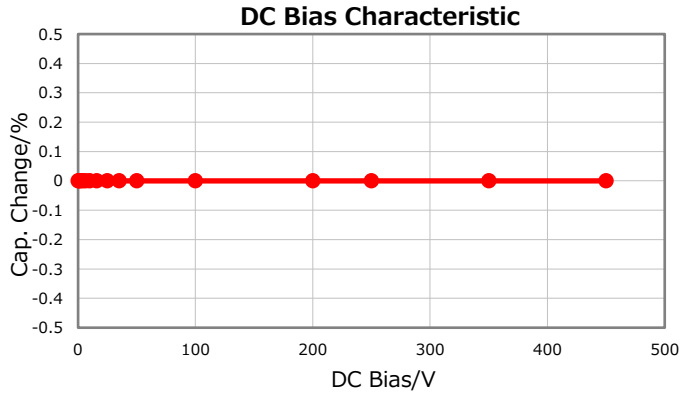

Dimensions

L	3.20mm ±0.20mm
W	1.60mm ±0.20mm
T	1.15mm ±0.15mm
B	0.20mm Min.
G	1.00mm Min.

Temperature Characteristic

CH (-25 to 85 degC 0+/-60ppm/degC)

Rated Voltage

2W(450Vdc)

Capacitance

8.2nF

Capacitance Tolerance

J (±5%)

Q Factor

1000 Min.

Insulation Resistance

10Gohm Min

AEC-Q200

Not Applicable

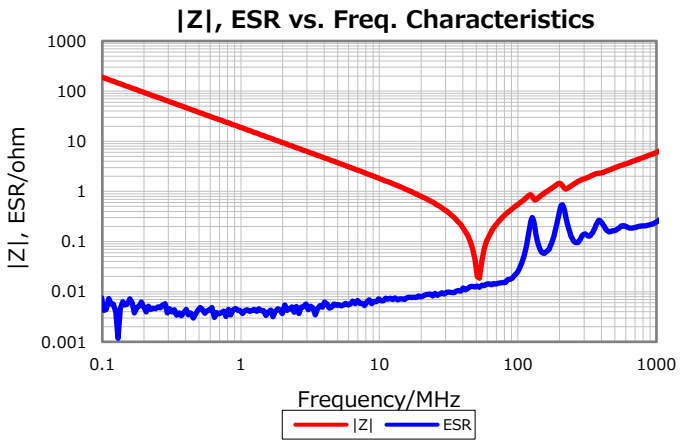

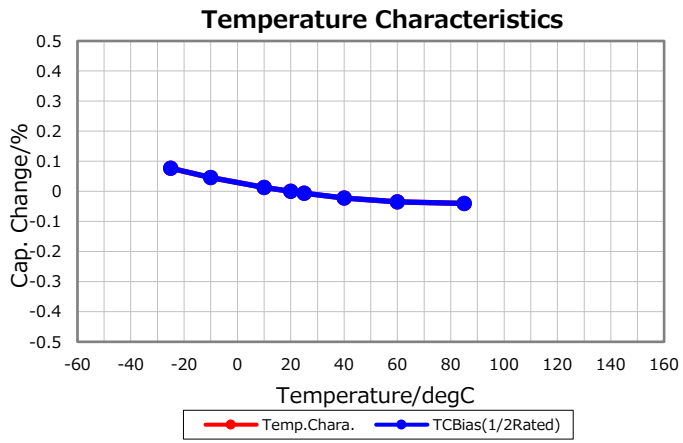

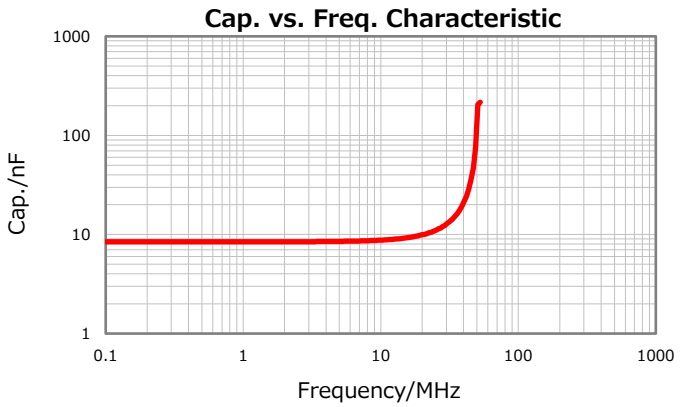

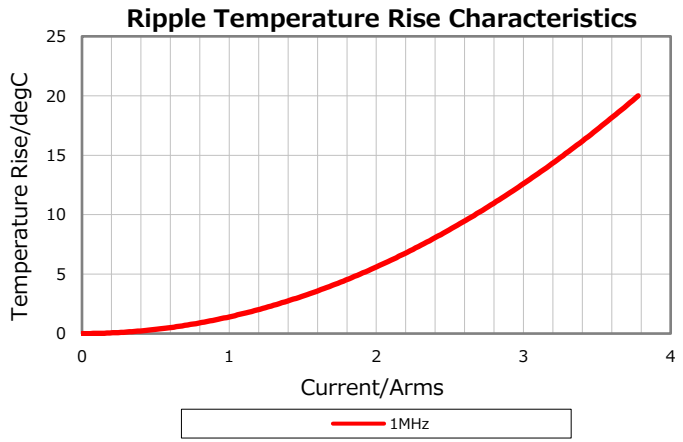

Characterization Sheet (Multilayer Ceramic Chip Capacitors)

TDK

All specifications are subject to change without notice.

July 2, 2019