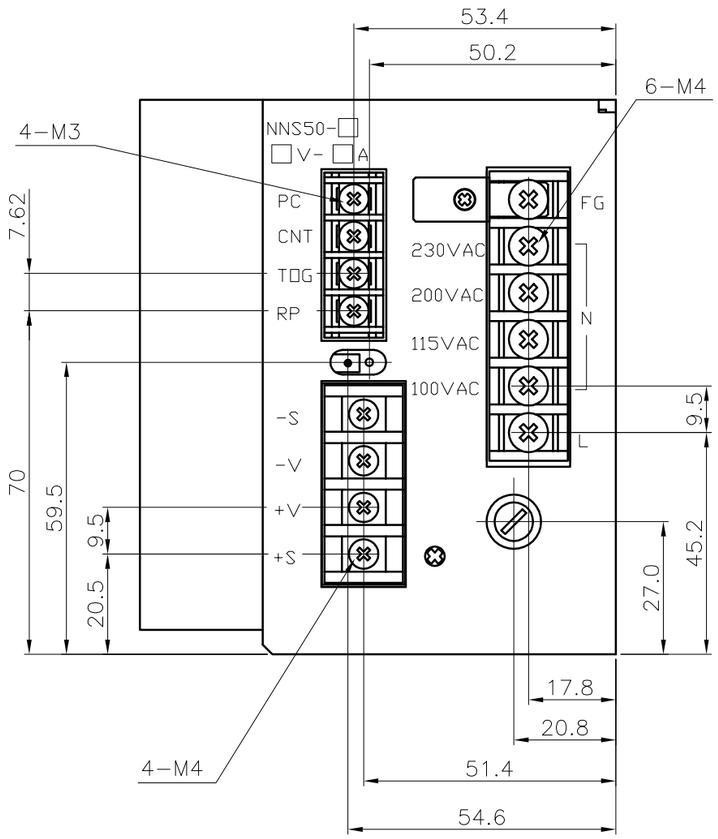

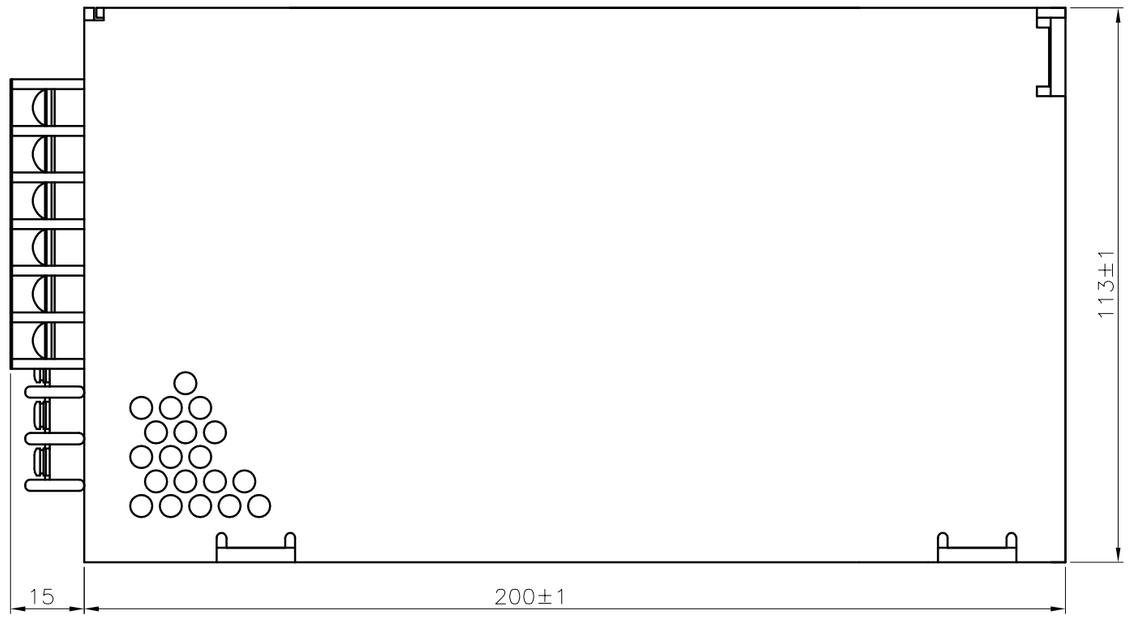

===ACCESSORIES===

*COVER FOR BARRIER TERMINAL STRIP --- 3

*FUSE (250V,2A FOR 200/230V INPUT) --- 1

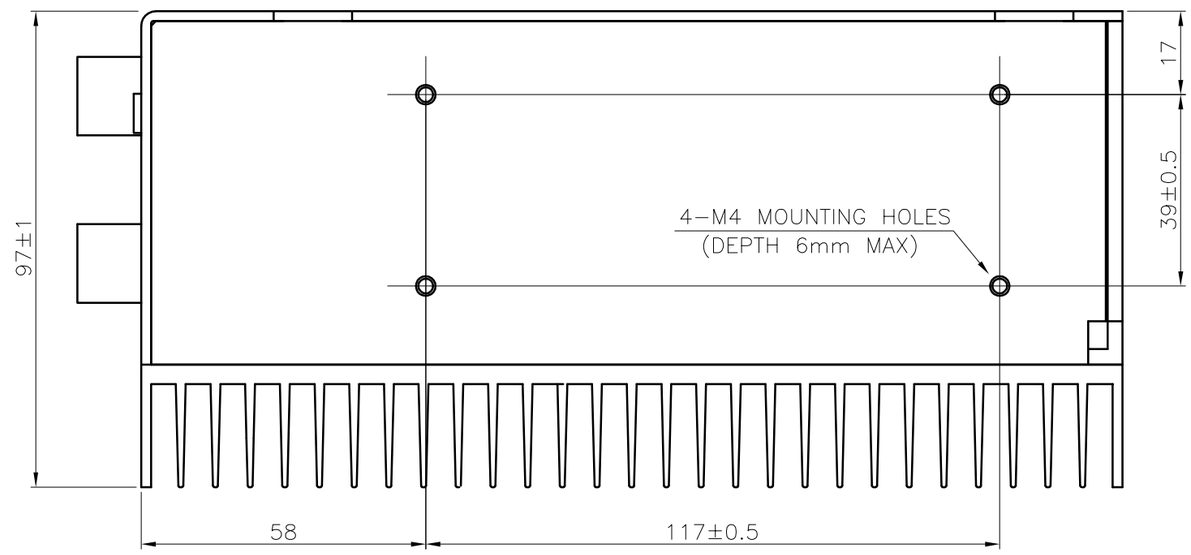

(unit : mm)

MODEL NAME	NNS50
TDK-Lambda	

IA507−02−01A