C1005X5R1E223M050BA

TDK Item Description : C1005X5R1E223MT****

Lead Free | Halogen Free | REACH | RoHS COMPLIANT

Application & Main Feature

Commercial Grade (General (Up to 50V))

Series

C1005 [EIA CC0402]

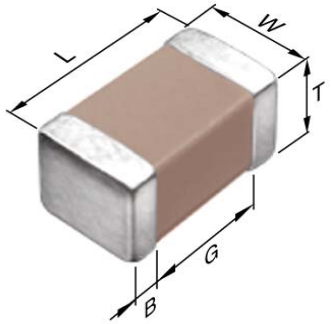

Dimensions

L	1.00mm +/-0.05mm
W	0.50mm +/-0.05mm
T	0.50mm +/-0.05mm
B	0.10mm Min.
G	0.30mm Min.

Temperature Characteristic

X5R (-55 to 85 degC +/-15%)

Rated Voltage

1E (25Vdc)

Capacitance

22nF

Capacitance Tolerance

M (+/-20%)

Dissipation Factor

3% Max.

Insulation Resistance

10Gohm Min.

AEC-Q200

Not Applicable

DC Bias Characteristic

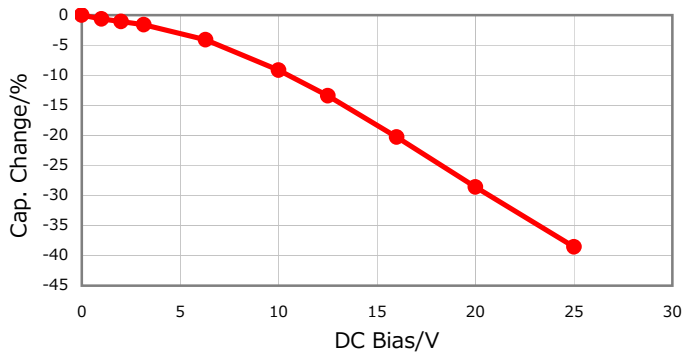

|Z|, ESR vs. Freq. Characteristics

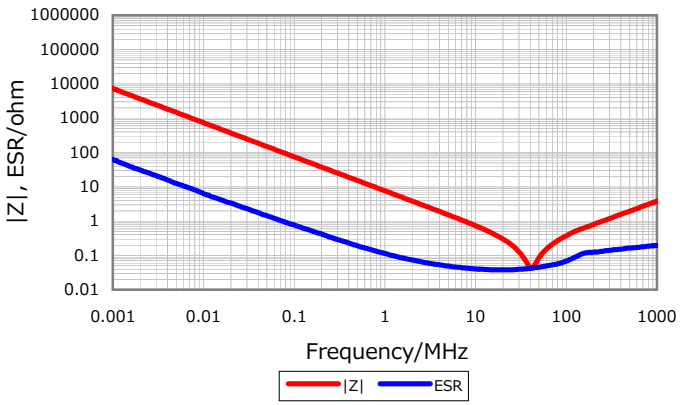

Temperature Characteristics

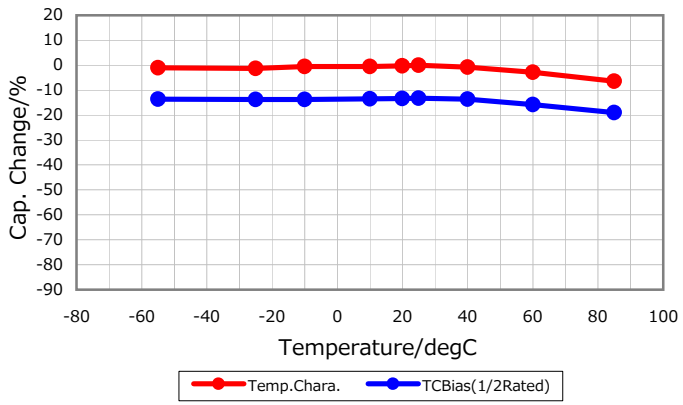

Cap. vs. Freq. Characteristic

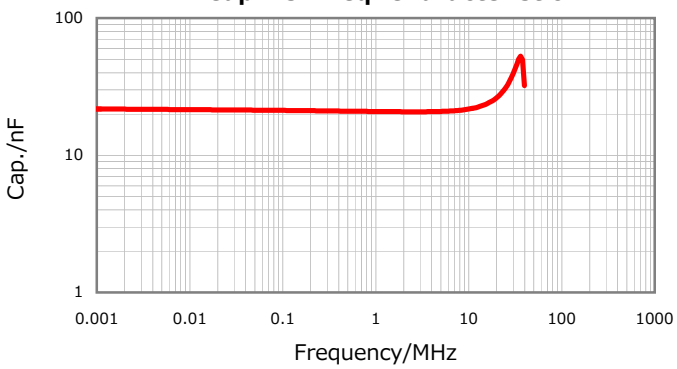

Ripple Temperature Rise Characteristics

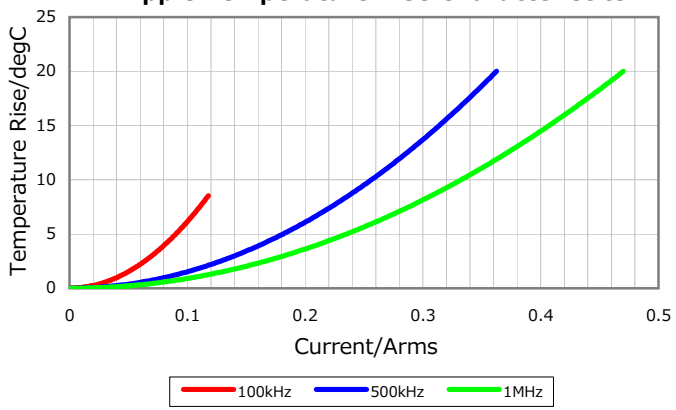

Characterization Sheet (Multilayer Ceramic Chip Capacitors)

TDK

All specifications are subject to change without notice.

January 3, 2016