C1608X5R2A332K080AA

TDK Item Description : C1608X5R2A332KT****

Lead Free | Halogen Free | REACH | RoHS COMPLIANT

Application & Main Feature

Commercial Grade (Mid Voltage (100 to 630V))

Series

C1608 [EIA CC0603]

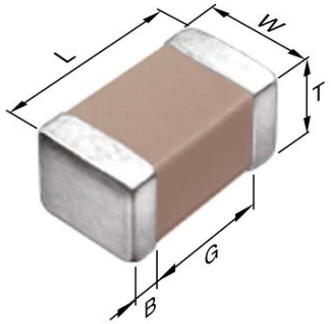

Dimensions

L	1.60mm +/-0.1mm
W	0.80mm +/-0.1mm
T	0.80mm +/-0.1mm
B	0.20mm Min.
G	0.30mm Min.

Temperature Characteristic

X5R (-55 to 85 degC +/-15%)

Rated Voltage

2A (100Vdc)

Capacitance

3.3nF

Capacitance Tolerance

K (+/-10%)

Dissipation Factor

3% Max.

Insulation Resistance

10Gohm Min.

AEC-Q200

Not Applicable

DC Bias Characteristic

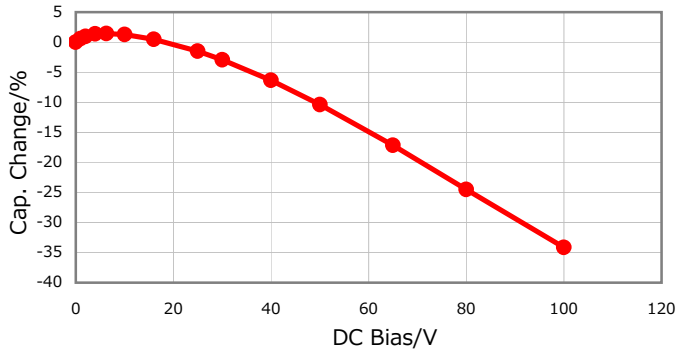

|Z|, ESR vs. Freq. Characteristics

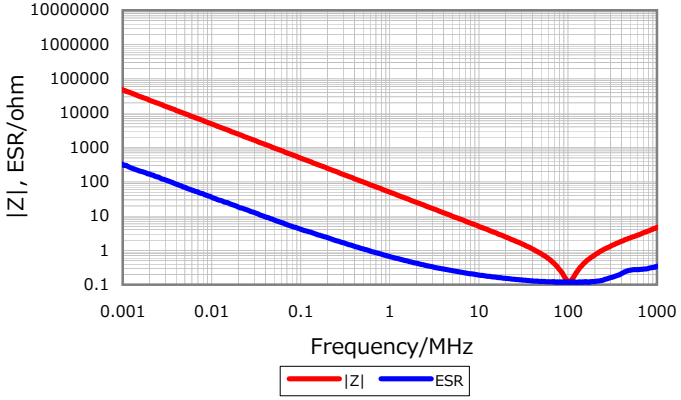

Temperature Characteristics

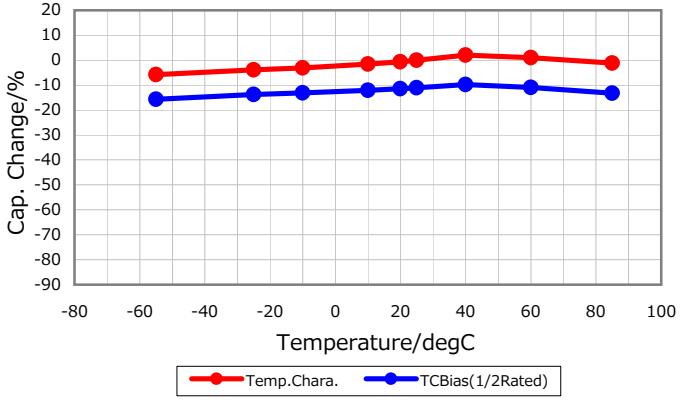

Cap. vs. Freq. Characteristic

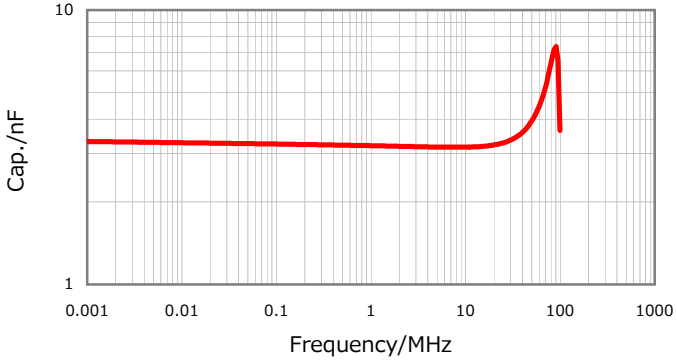

Ripple Temperature Rise Characteristics

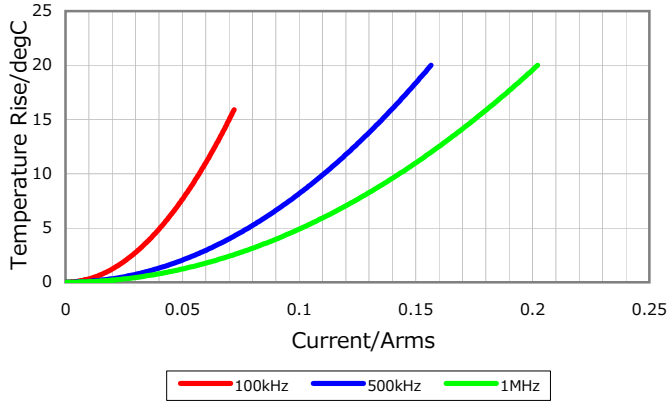

Characterization Sheet (Multilayer Ceramic Chip Capacitors)

TDK

All specifications are subject to change without notice.

January 3, 2016