C1608X8R2A222M080AA

TDK Item Description : C1608X8R2A222MT****

Lead Free | Halogen Free | REACH | RoHS COMPLIANT

Application & Main Feature

Commercial Grade (High Temperature Application)

Series

C1608 [EIA CC0603]

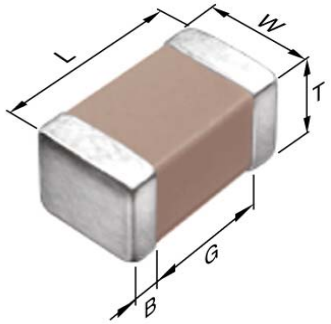

Dimensions

L	1.60mm +/-0.1mm
W	0.80mm +/-0.1mm
T	0.80mm +/-0.1mm
B	0.20mm Min.
G	0.30mm Min.

Temperature Characteristic

X8R (-55 to 150 degC +/-15%)

Rated Voltage

2A (100Vdc)

Capacitance

2.2nF

Capacitance Tolerance

M (+/-20%)

Dissipation Factor

3% Max.

Insulation Resistance

10Gohm Min.

AEC-Q200

Not Applicable

DC Bias Characteristic

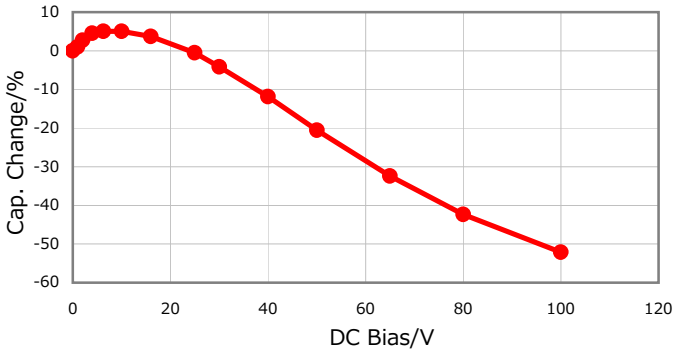

|Z|, ESR vs. Freq. Characteristics

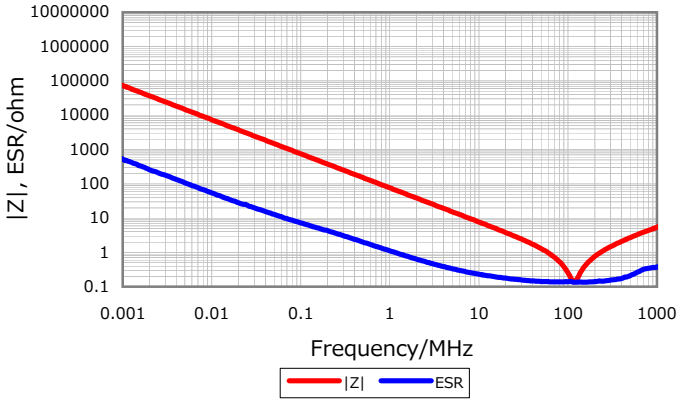

Temperature Characteristics

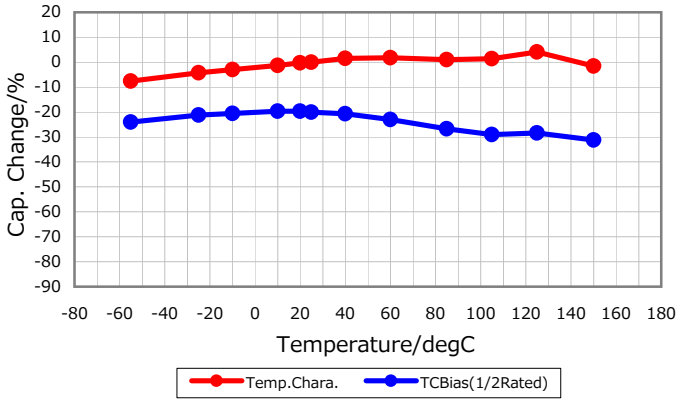

Cap. vs. Freq. Characteristic

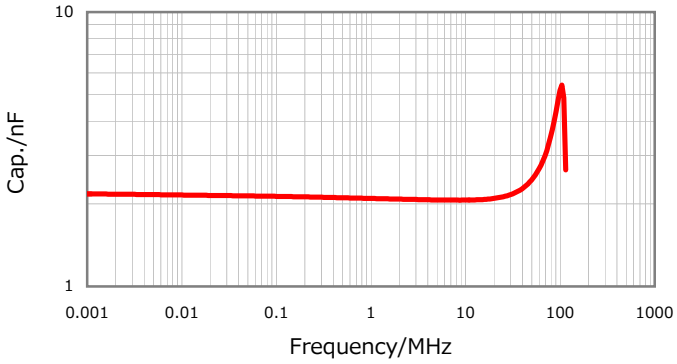

Ripple Temperature Rise Characteristics

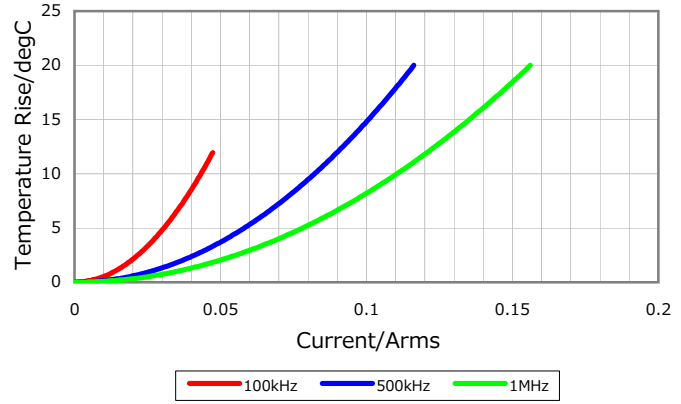

Characterization Sheet (Multilayer Ceramic Chip Capacitors)

TDK

All specifications are subject to change without notice.

January 3, 2016