C2012X6S1A685M085AC

TDK Item Description : C2012X6S1A685MT****

Lead Free | Halogen Free | REACH | RoHS COMPLIANT

Application & Main Feature

Commercial Grade (General (Up to 50V))

Series

C2012 [EIA CC0805]

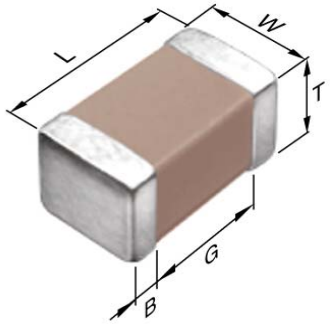

Dimensions

L	2.00mm +/-0.2mm
W	1.25mm +/-0.2mm
T	0.85mm +/-0.15mm
B	0.20mm Min.
G	0.50mm Min.

Temperature Characteristic

X6S (-55 to 105 degC +/-22%)

Rated Voltage

1A (10Vdc)

Capacitance

6.8uF

Capacitance Tolerance

M (+/-20%)

Dissipation Factor

10% Max.

Insulation Resistance

14Mohm Min.

AEC-Q200

Not Applicable

DC Bias Characteristic

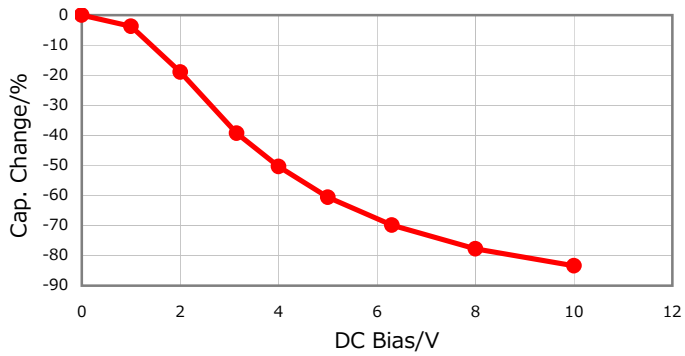

|Z|, ESR vs. Freq. Characteristics

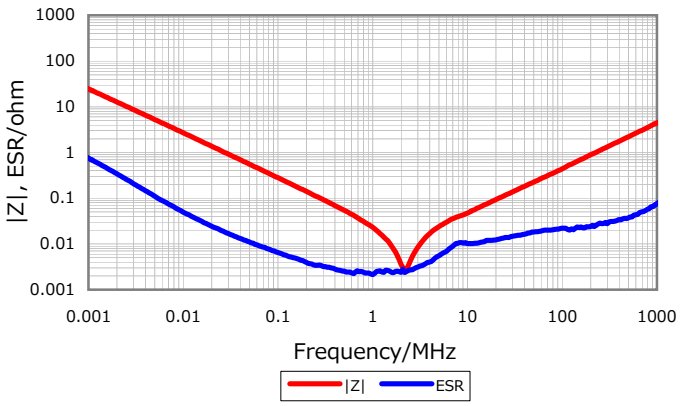

Temperature Characteristics

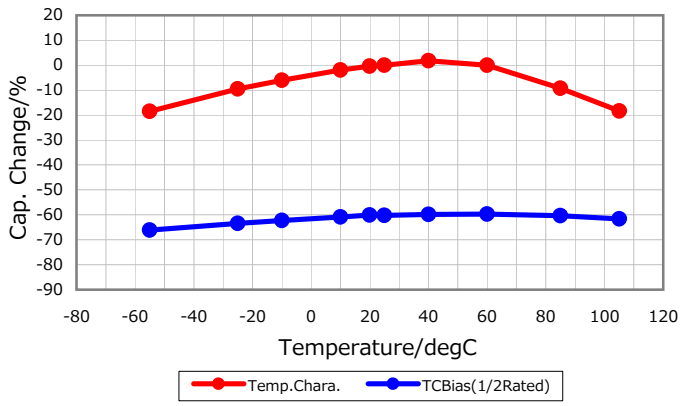

Cap. vs. Freq. Characteristic

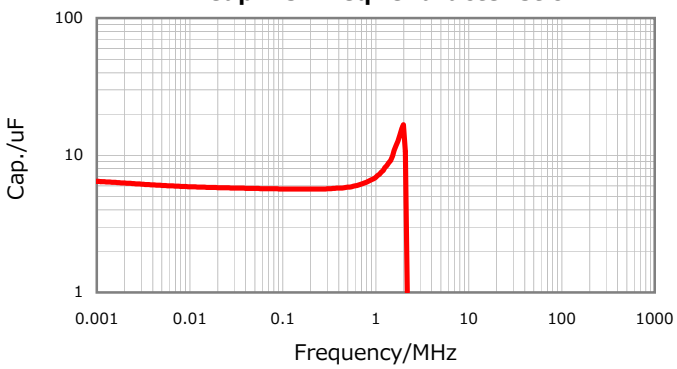

Ripple Temperature Rise Characteristics

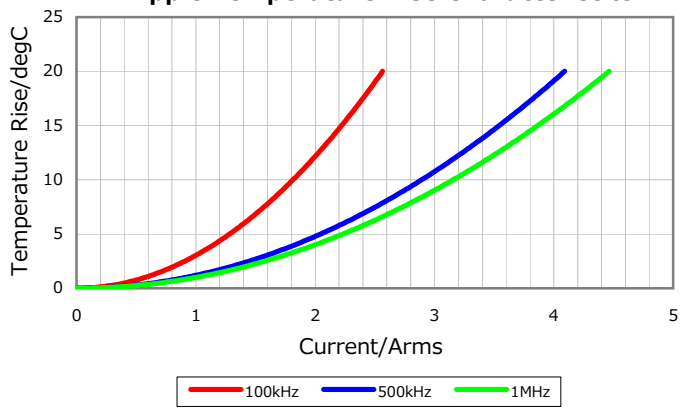

Characterization Sheet (Multilayer Ceramic Chip Capacitors)

TDK

All specifications are subject to change without notice.

January 3, 2016