C2012X6S1A685M125AB

TDK Item Description : C2012X6S1A685MT****

Lead Free | Halogen Free | REACH | RoHS COMPLIANT

Application & Main Feature

Commercial Grade (General (Up to 50V))

Series

C2012 [EIA CC0805]

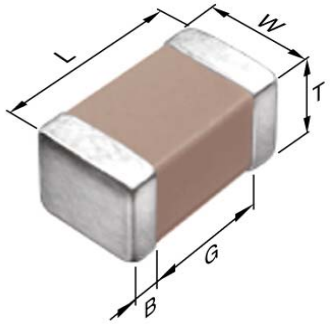

Dimensions

L	2.00mm +/-0.2mm
W	1.25mm +/-0.2mm
T	1.25mm +/-0.2mm
B	0.20mm Min.
G	0.50mm Min.

Temperature Characteristic

X6S (-55 to 105 degC +/-22%)

Rated Voltage

1A (10Vdc)

Capacitance

6.8uF

Capacitance Tolerance

M (+/-20%)

Dissipation Factor

10% Max.

Insulation Resistance

14Mohm Min.

AEC-Q200

Not Applicable

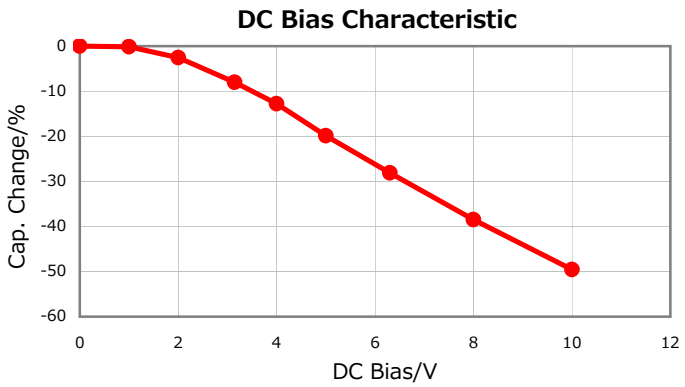

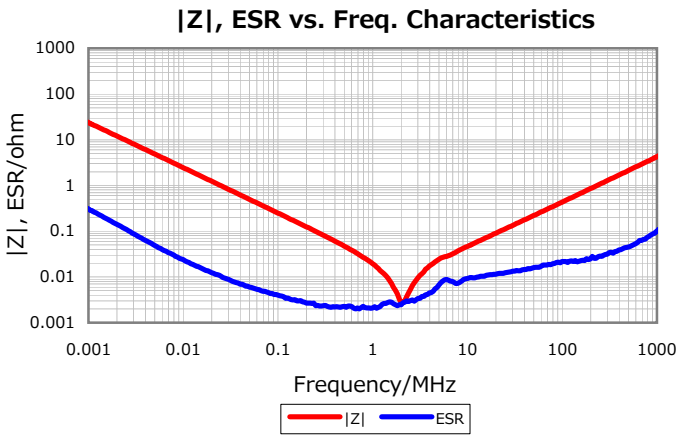

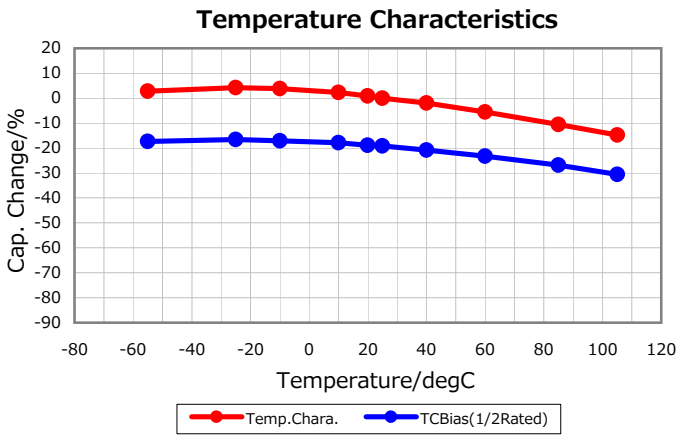

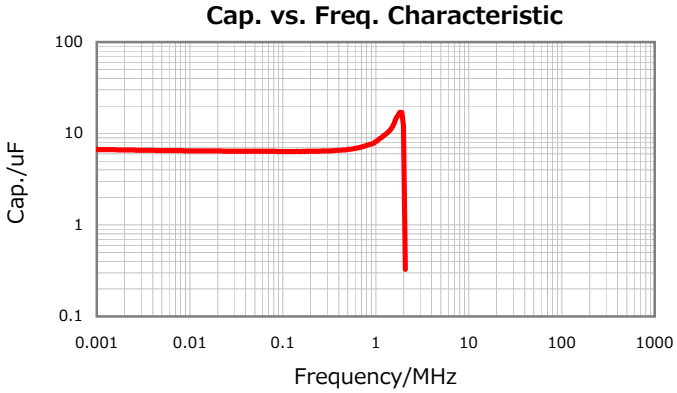

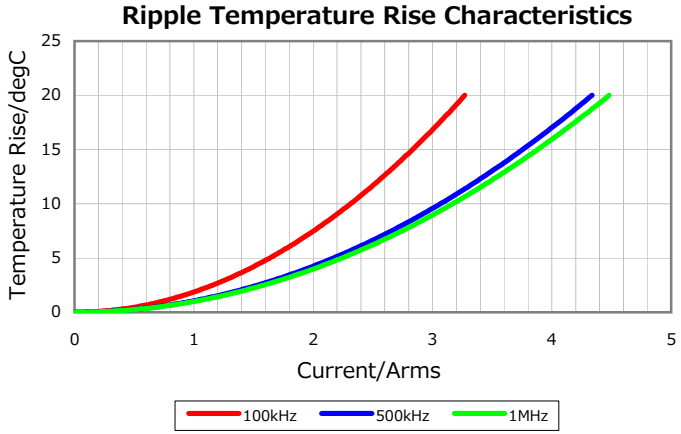

Characterization Sheet (Multilayer Ceramic Chip Capacitors)

TDK

All specifications are subject to change without notice.

January 3, 2016