CGA3E2X8R1H152M080AE

TDK Item Description : CGA3E2X8R1H152MT***S

Lead Free | Halogen Free | REACH | RoHS COMPLIANT

Equivalent C1608X8R1H152M for Automotive

Application & Main Feature

Automotive Grade (Soft Termination)

Series

CGA3(1608) [EIA CC0603]

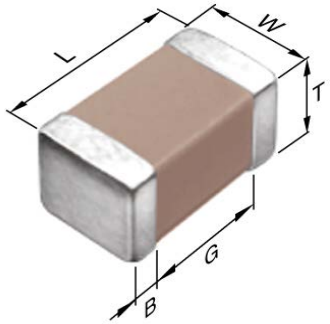

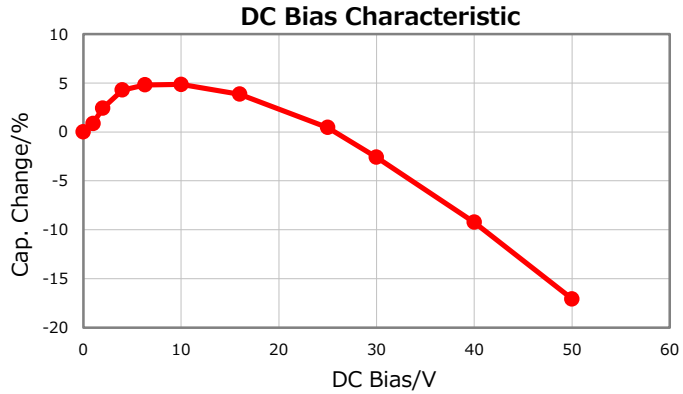

Dimensions

L	1.60mm +0.2,-0.1mm
W	0.80mm +0.15,-0.1mm
T	0.80mm +0.15,-0.1mm
B	0.20mm Min.
G	0.30mm Min.

Temperature Characteristic

X8R (-55 to 150 degC +/-15%)

Rated Voltage

1H (50Vdc)

Capacitance

1.5nF

Capacitance Tolerance

M (+/-20%)

Dissipation Factor

3% Max.

Insulation Resistance

10Gohm Min

AEC-Q200

Yes

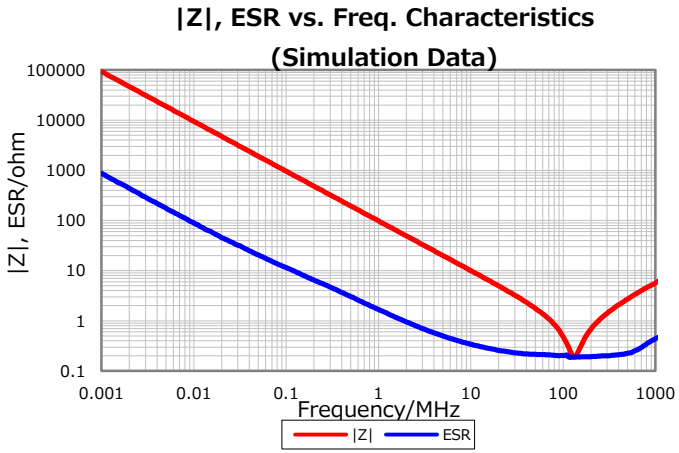

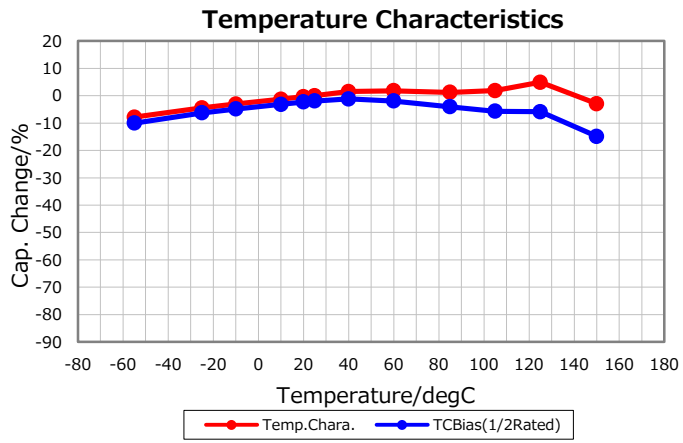

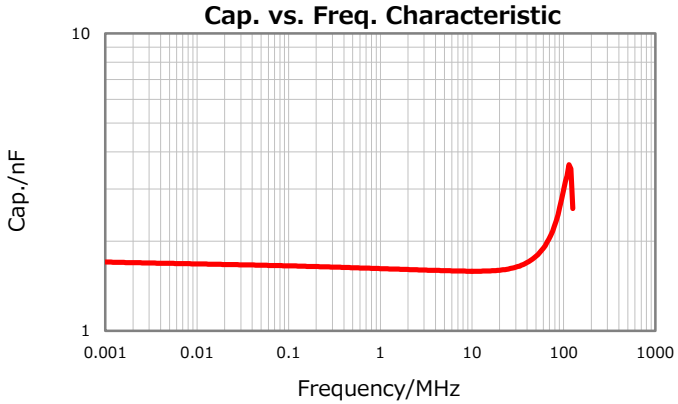

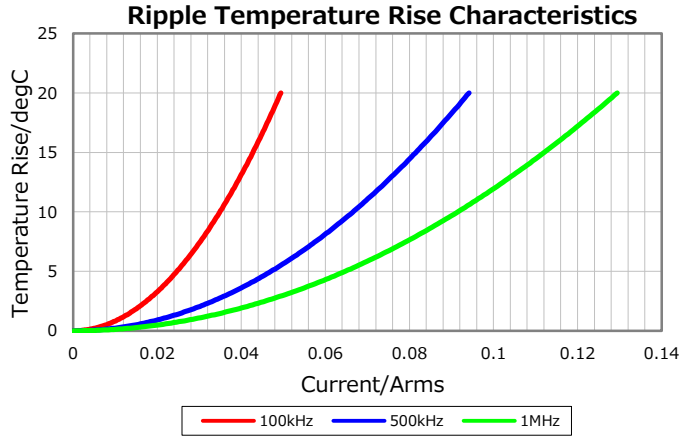

Characterization Sheet (Multilayer Ceramic Chip Capacitors)

TDK

All specifications are subject to change without notice.

March 17, 2017