CGA3E3X7R1H224M080AB

TDK item description : CGA3E3X7R1H224MT****

Lead Free | Halogen Free | REACH | RoHS COMPLIANT

Equivalent C1608X7R1H224M for Automotive

Application & Main Feature

Automotive grade (General type)

Series

CGA3(1608) [EIA 0603]

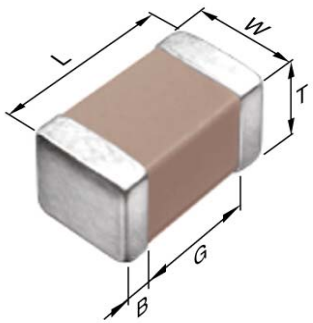

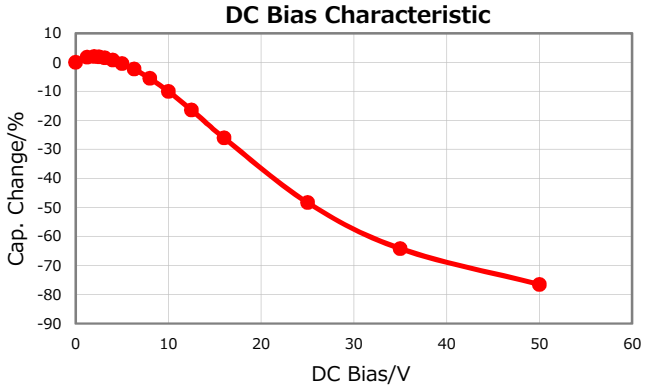

Dimensions

L	1.60±0.10 mm
W	0.80±0.10 mm
T	0.80±0.10 mm
B	0.20 mm min.
G	0.30 mm min.

Temperature Characteristic

X7R (-55 to +125 degC, ±15%)

Rated Voltage

1H (50Vdc)

Capacitance

220nF

Capacitance Tolerance

M (±20%)

Dissipation Factor

5 % max.

Insulation Resistance

2272 Mohm min.

AEC-Q200

Yes

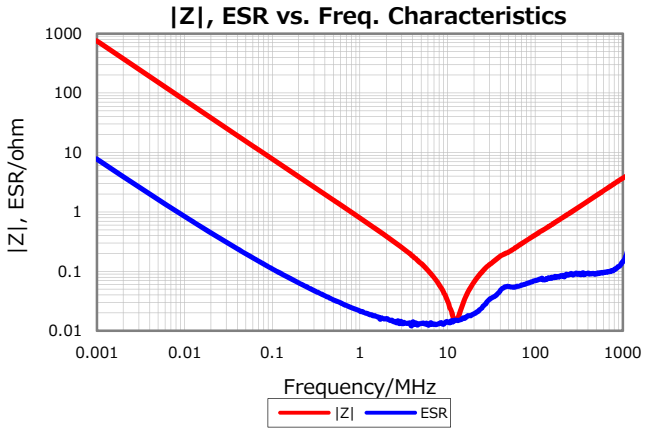

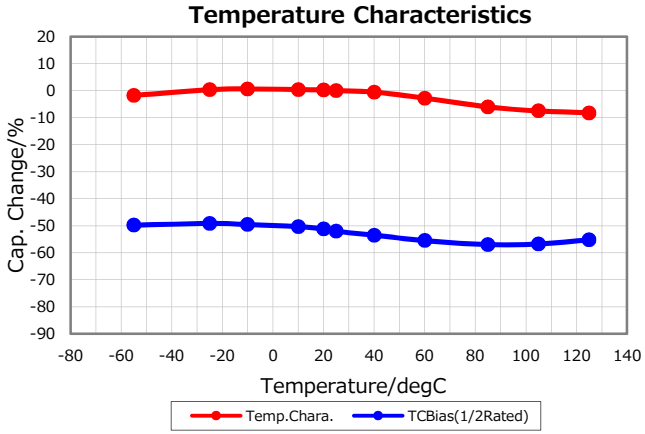

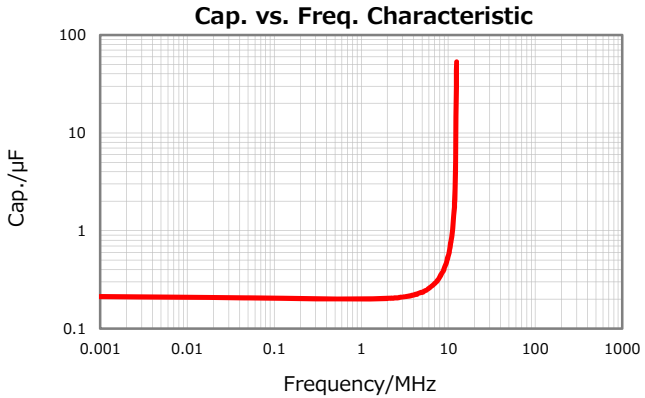

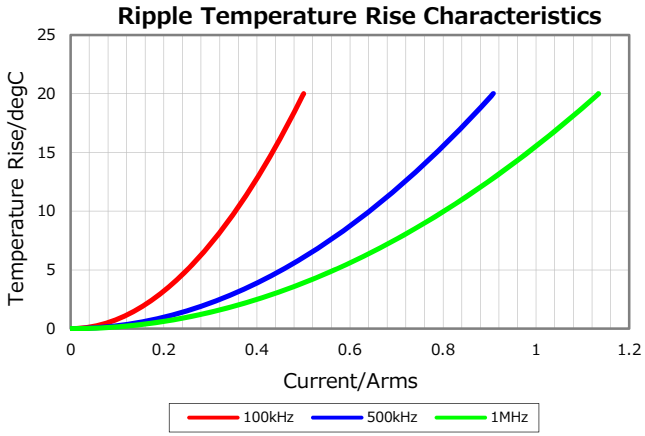

Characterization Sheet (Multilayer Ceramic Chip Capacitors)

TDK

All specifications are subject to change without notice.

January 9, 2020