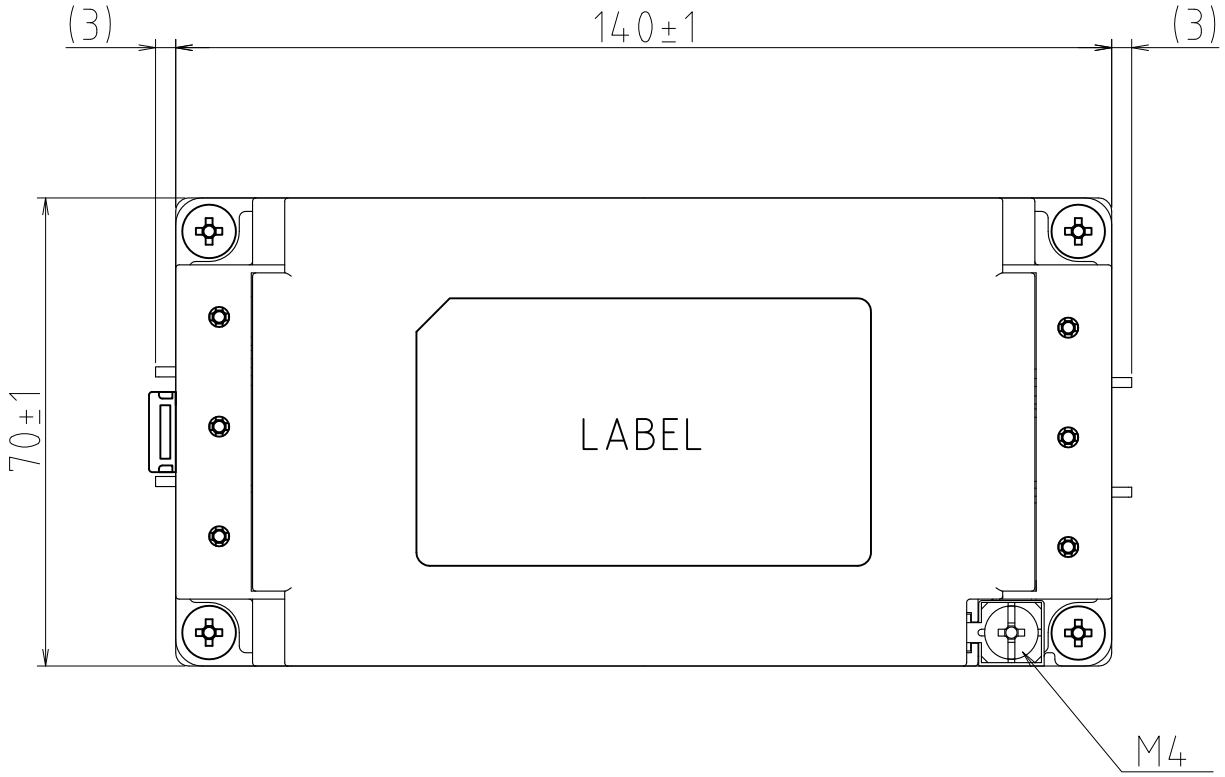

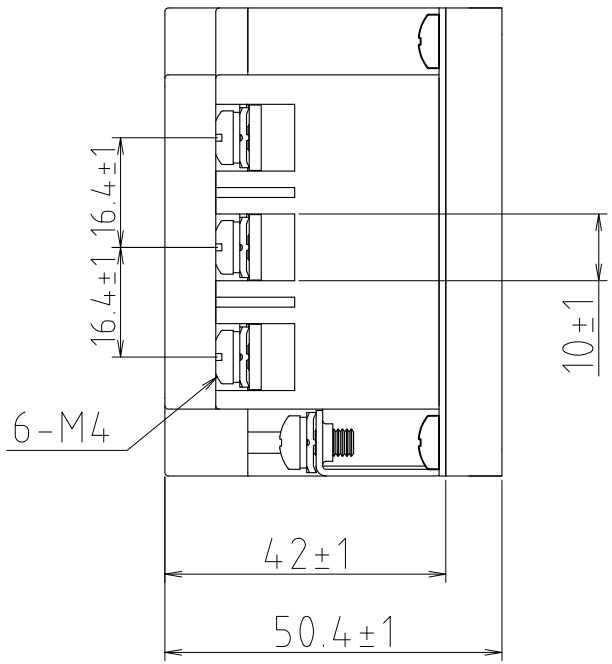

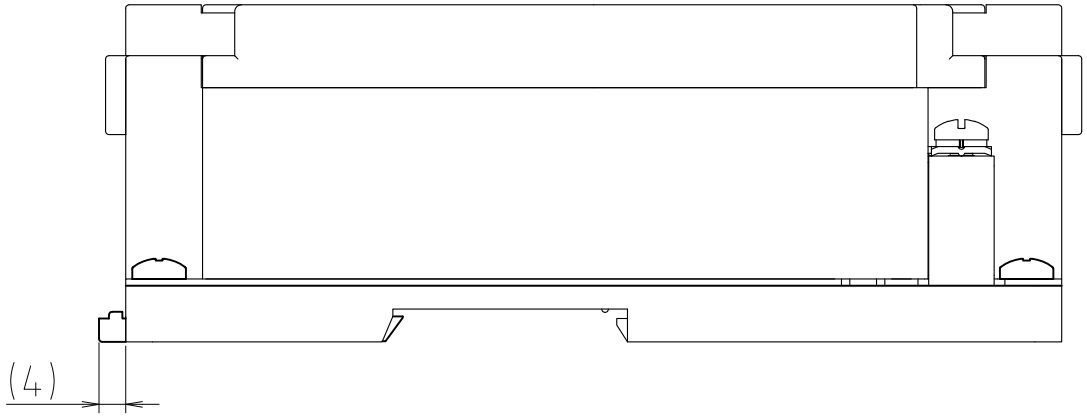

TDK-EPC Corporation.

MODEL NAME	RTEN-5020/5030(D)
TDK·Lambda	

CAUTION
- Specifications which provide more details for the proper and safe use of the described product are available upon request.
- All specification are subject to change without notice.

A575SD-RTEN-B-3 201410 (unit : mm)