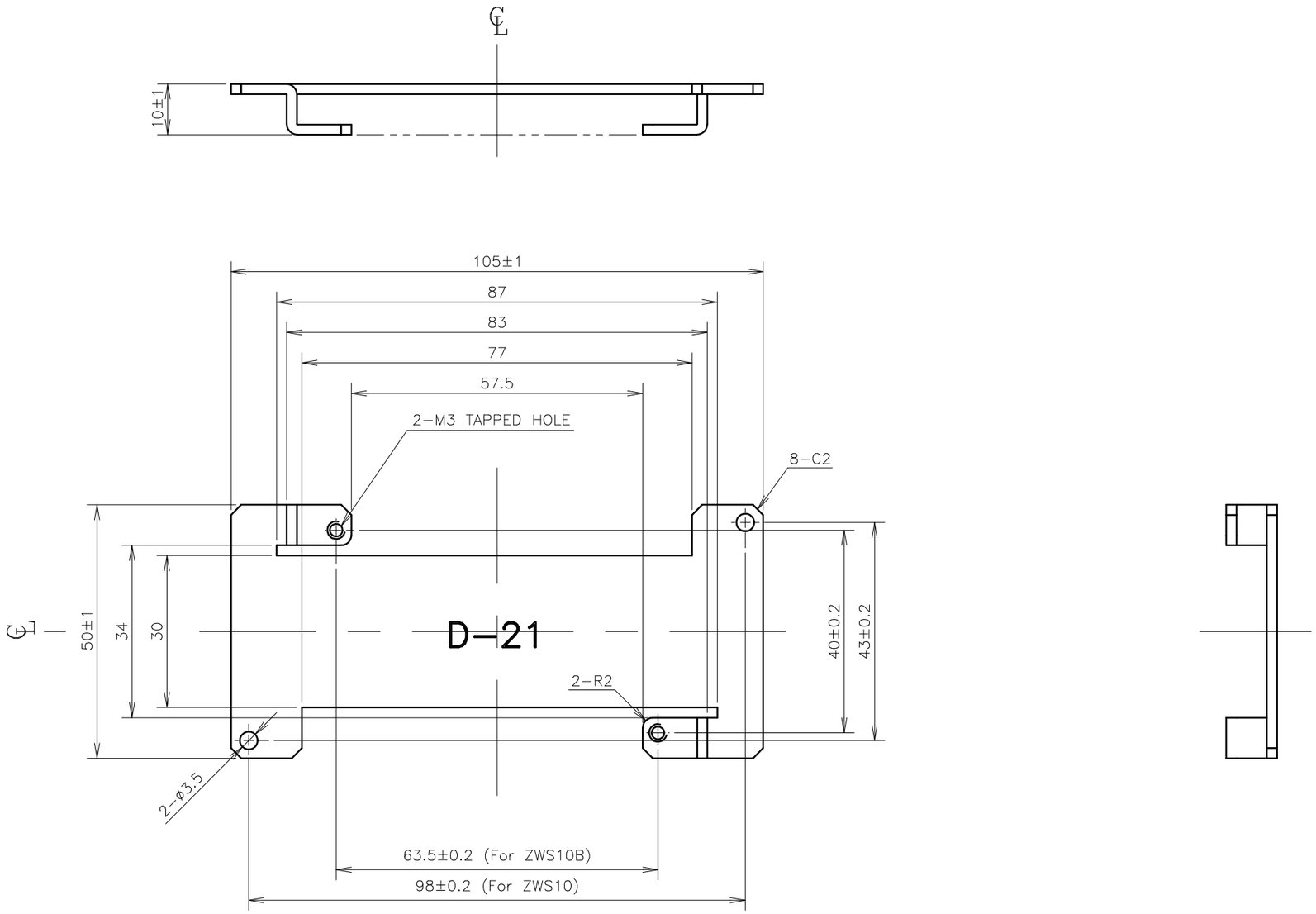

Mounting Plate for ZWS10=>ZWS10B

NOTE

	ITEM	TYPE	NOTE
1	MATERIAL	A5052P-H32, t=2.0	–
2	PLATING	–	–
3	RECOMMENDED SCREWS FOR POWER SUPPLY *Screws are not included with unit.	M3x6mm SEMS SCREW	2PCS FOR MOUNTING RECOMMENDED TORQUE 0.49N·m(5.0kgf·cm)
4	WEIGHT(Typ)	–	25g

(unit : mm)

MODEL NAME	D-21
TDK-Lambda	

A293-02-216A